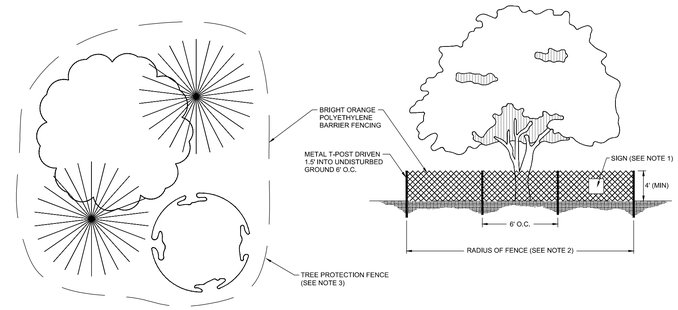

NOTES:

1. ONE 24" x 24" SIGN EVERY 150 LF OF FENCE, HAVING THE FOLLOWING WORDING ON EACH SIGN:
   "TREE PROTECTION ZONE: KEEP OUT"
   "LA ZONA DE LA PROTECCION DEL ARBOL: NO ENTRAR"
2. RADIUS OF TREE PROTECTION FENCE SHALL EQUAL 1 FOOT RADIUS PER 1 INCH DBH OF TREE TRUNK OR AT THE DRIPLINE, WHICHEVER IS GREATER.
3. WHENEVER TWO OR MORE TREES ARE TO BE PROTECTED BY A SINGLE TREE PROTECTION FENCE, FENCE SHALL BE PLACED AT THE LIMITS OF THE CRITICAL ROOT ZONE.

TOWN OF COLLIERVILLE
TREE PROTECTION

SCALE: NONE | TOC-601

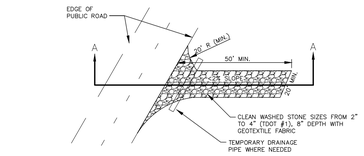

PLAN VIEW OF TEMPORARY CONSTRUCTION ROAD

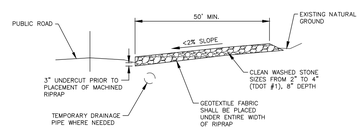

SECTION A–A

NOTES:

1. ADDITIONAL STONE MAY HAVE TO BE ADDED PERIODICALLY TO MAINTAIN PROPER FUNCTIONING OF THE PAD.
2. IF THE CRUSHED STONE DOES NOT ADEQUATELY REMOVE THE MUD FROM THE VEHICLE WHEELS, THE WHEELS SHOULD BE HOSED OFF BEFORE THE VEHICLE ENTERS A PUBLIC STREET.
3. THE WASHING SHOULD BE DONE ON AN AREA COVERED WITH CRUSHED STONE, AND THE WASTE WATER SHOULD DRAIN TO SEDIMENT TRAP OR SEDIMENT BARRIER.

TOWN OF COLLIERVILLE
CONSTRUCTION ENTRANCE / EXIT

SCALE: NONE | TOC-602

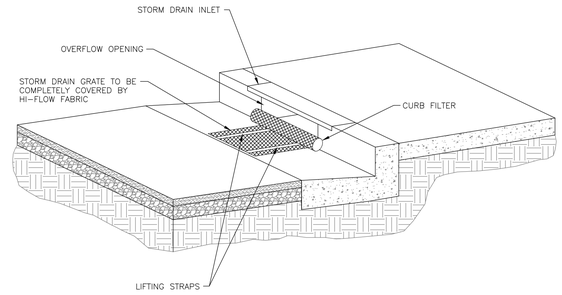

TOWN OF COLLIERVILLE
CURB BAG SEDIMENT BARRIER DETAIL

SCALE: NONE | TOC-604

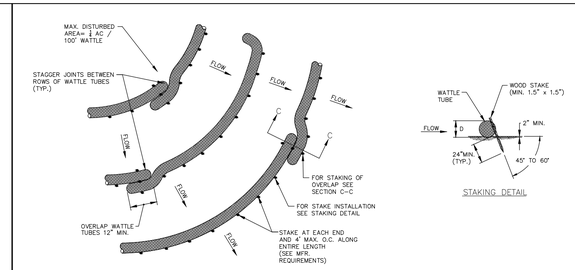

PLAN VIEW FOR SLOPE APPLICATION

STAKING DETAIL

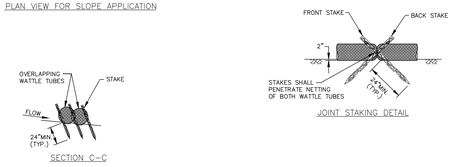

SECTION C–C

JOINT STAKING DETAIL

EROSION CONTROL PLAN LEGEND:

TOWN OF COLLIERVILLE
TUBE OR WATTLE DETAIL

SCALE: NONE | TOC-610

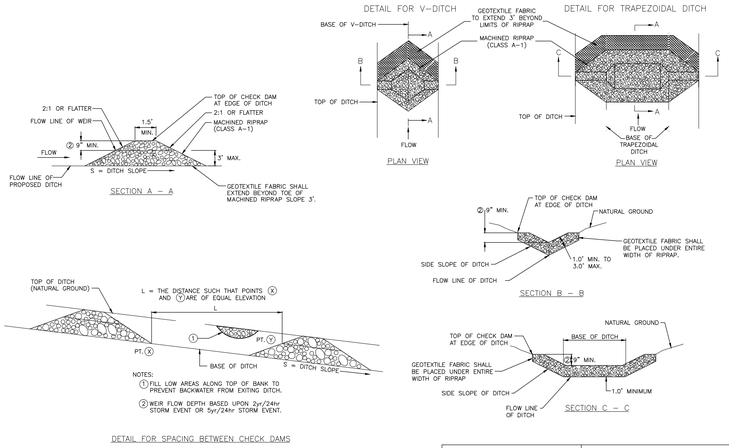

EROSION CONTROL PLAN LEGEND: CHECK DAM

TOWN OF COLLIERVILLE
CHECK DAM DETAIL

SCALE: NONE | TOC-605

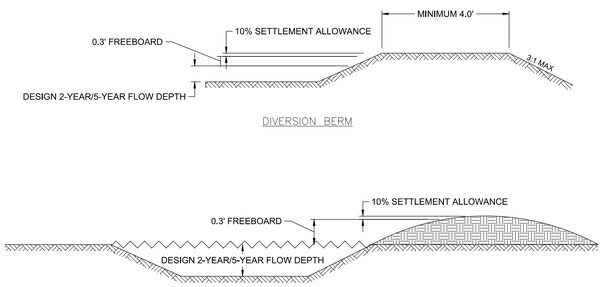

EROSION CONTROL PLAN LEGEND: TD DIVERSION

TOWN OF COLLIERVILLE
DIVERSION BERM AND DIVERSION CHANNEL DETAIL

SCALE: NONE | TOC-606

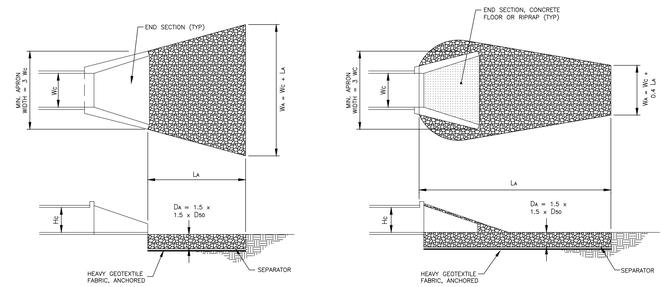

Hc = HEIGHT OF CULVERT
Wc = WIDTH OF CULVERT
La = LENGTH OF RIP–RAP APRON
Wa = WIDTH OF RIP–RAP APRON AT END
D50 = MEDIAN RIP–RAP SIZE
Dmax = MAXIMUM SIZE OF RIP–RAP = 1.5 D50
Da = DEPTH OF RIP–RAP APRON = 1.5 Dmax
SEPARATOR = GEOTEXTILE UNDERLAYMENT OR GRAVEL FILTER BLANKET

EROSION CONTROL PLAN LEGEND: OP

TOWN OF COLLIERVILLE
OUTLET PROTECTION DETAIL

SCALE: NONE | TOC-607

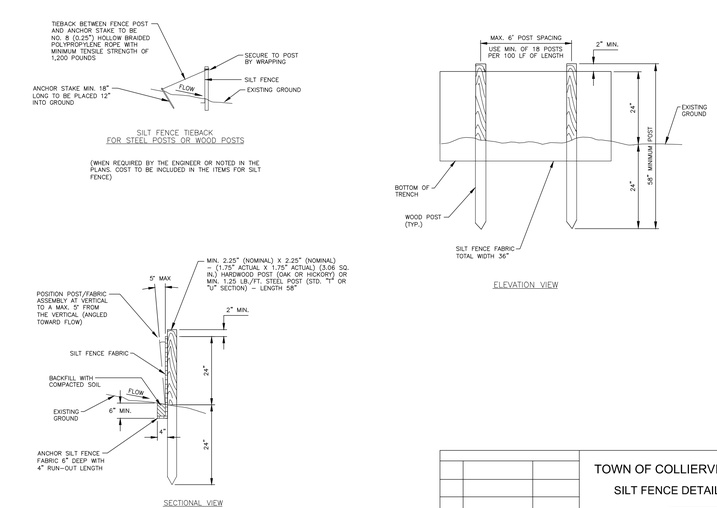

TOWN OF COLLIERVILLE
SILT FENCE DETAIL

SCALE: NONE | TOC-608

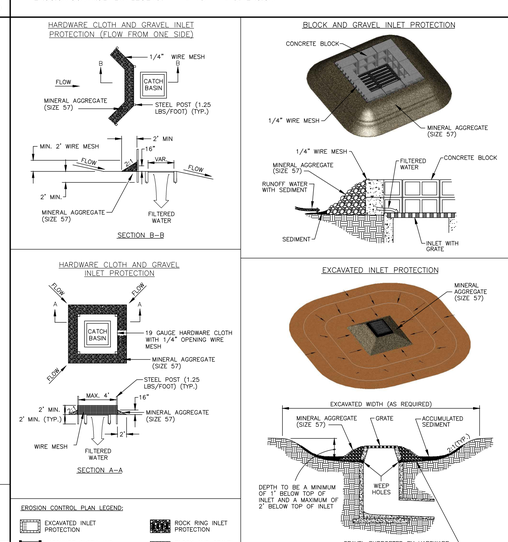

EROSION CONTROL PLAN LEGEND:

- EXCAVATED INLET PROTECTION
- HARDWARE CLOTH AND GRAVEL INLET PROTECTION
- ROCK RING INLET PROTECTION
- BLOCK AND GRAVEL INLET PROTECTION

REVISION		
ITEM NO.	DESCRIPTION OF CHANGE	APPROVAL DATE

TOWN OF COLLIERVILLE
INLET PROTECTION DETAILS

SCALE: NONE | TOC-609